EVA ROUND MIRROR CABINET 800MM

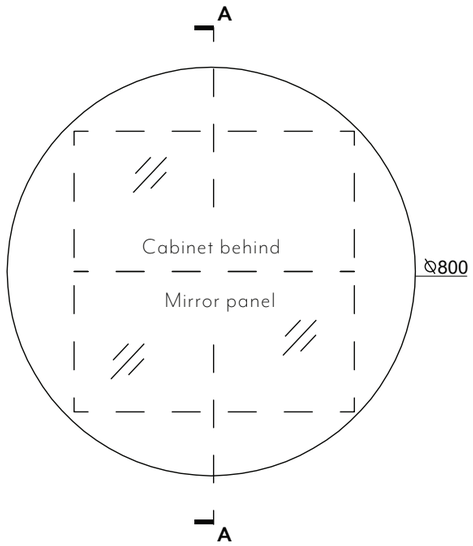

FRONT VIEW

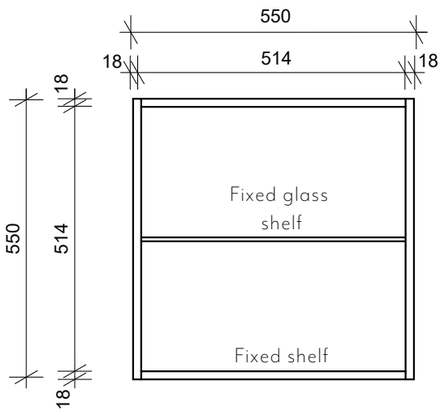

SECTION BB

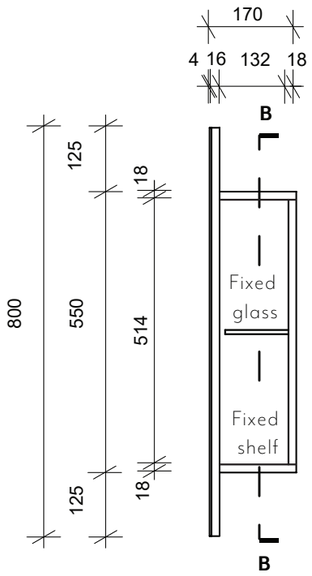

SECTION AA

Note: Dimensions are nominal measurements only

Disclaimer: Products in this specification manual must by regulation be installed by licensed and registered trade people. The manufacturer/distributor reserves the right to vary specifications or delete models from their range without prior notification. Dimensions are nominal measurements only. Dimensions and set-outs listed are correct at time of publication however the manufacturer/distributor takes no responsibility for printing errors. All ABI Products are designed in Australia. Copyright ABI Interiors 2019.

GENERAL MIRROR CABINET INSTALLATION GUIDE

Notes:

This installation guide is general and covers our round mirror cabinet range, the cabinet illustrated may not be the same as your purchased cabinet.

This product must be installed by a licensed tradesperson. As this is a general installation guide, there are many factors that are involved that can alter the installation method.

1 Check the desired height of round mirror cabinet from floor.

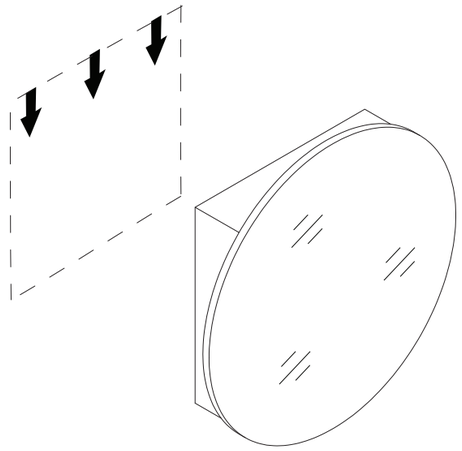

2 If correct height and position is suitable, level the top of the mirror cabinet & mark out desired position. Drill holes through the back of mirror cabinet into structure within wall.

Note: ensure adequate fixings are fixed at maximum 450 centres into structure within wall. *ABI* takes no responsibility if the mirror cabinet is not fixed into wall structure.

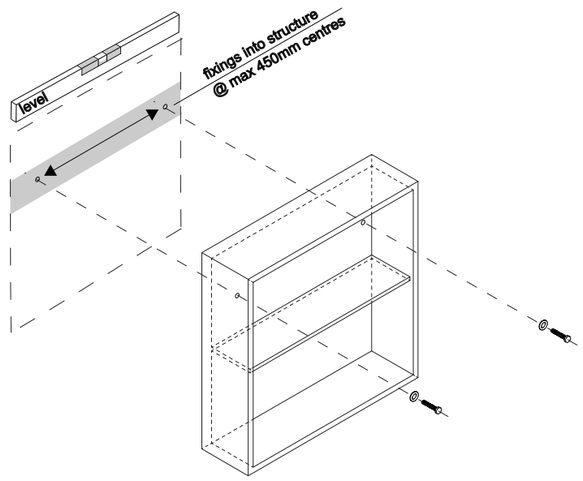
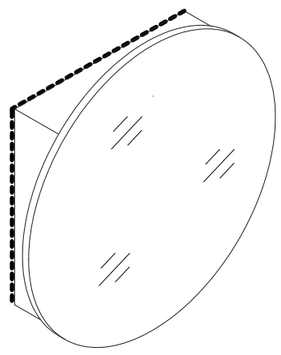
3 Silicon top and sides of mirror cabinet if necessary.