PRODUCT SPEC SHEET - BATH

architectural bathrooms & interiors

# HAYD

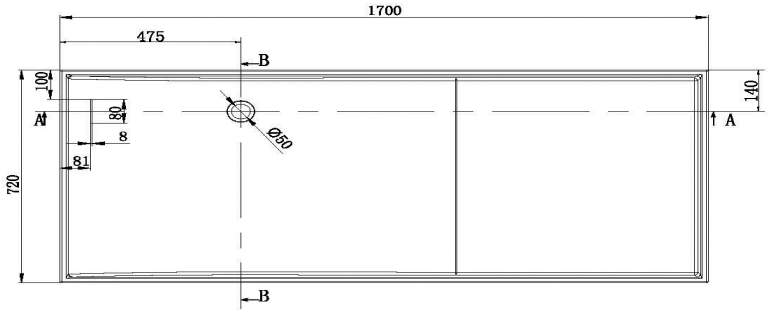


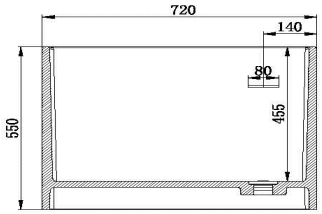


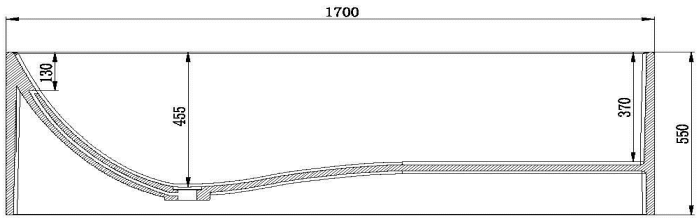


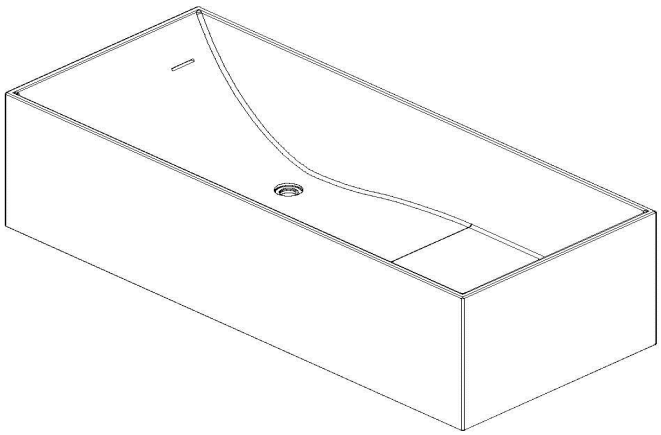

3/128 Kortum Drive | Burleigh Heads, QLD
sales@abi-international.com.au | (07) 5613 2632