SABA STONE BASIN

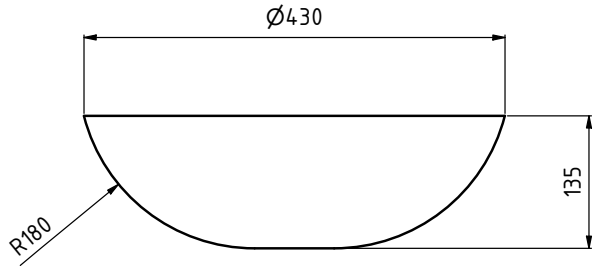

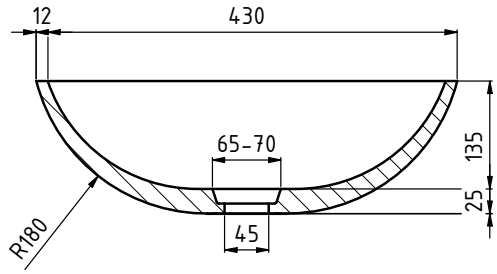

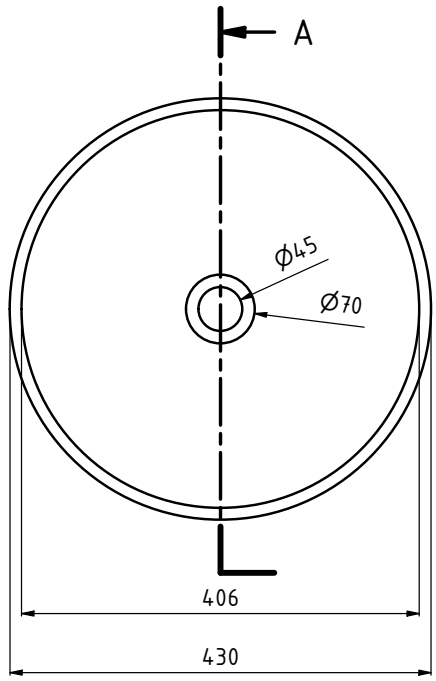

Note: Dimensions are nominal measurements only

INSTALLATION GUIDE

STEP 1: Mark out desired position in benchtop and drill hole

STEP 2: Install pop up waste & attach to plumbing

STEP 3: Seal basin to benchtop using recommended silicone

SPECIFICATIONS

RECOMMENDED USE	Domestic
MATERIAL	Carrara Marble
INSTALLATION	Bench Mount
WARRANTY	Structure: 5 years | Finish: 5 years

Disclaimer: Products in this specification manual must by regulation be installed by licensed and registered trade people. The manufacturer/distributor reserves the right to vary specifications or delete models from their range without prior notification. Dimensions are nominal measurements only. Dimensions and set-outs listed are correct at time of publication however the manufacturer/distributor takes no responsibility for printing errors. All ABI Products are designed in Australia. Copyright ABI Interiors 2019. WWW.ABIINTERIORS.COM.AU